CAMBRIDGE
International Education

Cambridge IGCSE™

COMPUTER SCIENCE **0265/01**

Component 1 Computer Systems and Logic **For examination from 2029**

MARK SCHEME

Maximum Mark: 75

Specimen

This document has **12** pages.

© Cambridge University Press & Assessment 2026

General Marking Principles

All examiners must apply these marking principles when marking candidate responses.

1	Examiners must award marks for each response in line with: • the specific **content** defined in the mark scheme • the specific **skills** defined in the mark scheme or in the level descriptions • the **standard of response** required as exemplified by the standardisation scripts.
2	Examiners must award **whole marks** (not half marks, or other fractions).
3	Examiners must award marks **positively**. This means that: • marks are not deducted for errors or omissions • marks are awarded for correct/valid answers as defined in the mark scheme and also for **other valid answers** which go beyond the scope of the syllabus and mark scheme referring to your team leader as appropriate • the quality of spelling, punctuation and grammar are judged **only** when the mark scheme indicates that these features are **specifically assessed** in the question. However, the meaning of all responses must be unambiguous.
4	Examiners must **consistently** apply the requirements of the mark scheme and any rules for what to do when candidates have not followed instructions correctly.
5	Examiners must use the **full range of marks** defined in the mark scheme, unless limited by the quality of the candidate responses seen.
6	Examiners must award marks according to the mark scheme and **must not** award marks with grade thresholds or grade descriptions in mind.

© Cambridge University Press & Assessment 2026

Question	Answer	Marks	Guidance
1(a)	66	**1**	
1(b)	61	**1**	
1(c)	1100101	**1**	
1(d)	It represents all letters from the English alphabet It represents denary numbers	**2**	

Question	Answer	Marks	Guidance
2(a)	it has a header it has a payload it has a trailer	**3**	
2(b)	Less storage space on the web server is required.	**1**	
2(c)	Run length encoding // RLE Huffman coding	**2**	
2(d)	Any **four** from: • parallel would allow fastest transmission • … of the large amount of data • data can be uploaded and downloaded … • … but this does not have to be at the same time • data is not required to travel a long distance • … therefore skewing is not a problem	**4**	

© Cambridge University Press & Assessment 2026

Question	Answer	Marks	Guidance
3(a)	**One** mark for correct carry row (zeros do not have to be present) 011000110 **One** mark for correct right nibble 0110 **One** mark for correct left nibble with no overflow shown 1100 **carry** ☐ 1 1 1 ☐ ☐ ☐ 1 ☐ 0 1 0 1 0 1 0 1 + 0 1 1 1 0 0 0 1 **answer** ☐ 1 1 0 0 0 1 1 0	**3**	
3(b)	11100001	**1**	

Question	Answer	Marks	Guidance
4(a)	**One** mark for each correct term in the correct place. The structure of language statements in a computer program is called the **syntax**. A programming language that uses natural language statements is called a **high-level** language. When programs are written in this type of language they need a **translator** to convert them into **machine code**.	**4**	

© Cambridge University Press & Assessment 2026

Question	Answer	Marks	Guidance
4(b)	Any **three** from: • code editor • run-time environment • translator • error diagnostics • auto-completion • auto-correction • pretty printing • AI assistance	**3**	
4(c)	Any **three** from: For example: • allocating memory to processes • loading processes into RAM • paging and segmentation • creating/managing virtual memory • memory protection	**3**	

© Cambridge University Press & Assessment 2026

Question	Answer	Marks	Guidance
5	**Three** marks for 4 correct lines **Two** marks for 2/3 correct lines **One** mark for 1 correct line **component** → **statement** program counter (PC) → stores the address of the next instruction to be processed memory data register (MDR) → stores the next instruction to be processed accumulator (ACC) → stores the interim results of calculations control unit (CU) → sends signals to manage the flow of data in the central processing unit (CPU)	**3**	

Question	Answer	Marks	Guidance
6(a)	**One** mark for each correct core principle **statement** → **core principle** This verifies a user's identity to make sure that they are allowed access to data. → **Authenticity** This provides proof of sending and receiving data so that the transmission of data can be traced. → **Non-Repudiation** This makes sure that data cannot be altered or deleted in an unauthorised way, therefore data is accurate and trustworthy. → **Integrity**	**3**	

© Cambridge University Press & Assessment 2026

Question	Answer	Marks	Guidance
6(b)	Any **three** from: • brute-force attack • data interception • distributed denial of service (DDoS) attack • malware // by example (virus, worm, Trojan horse, spyware, adware, ransomware) • pharming • phishing • social engineering • structured query language (SQL) injection	**3**	

Question	Answer	Marks	Guidance
7(a)	**One** mark for each logic gate in the correct place, with the correct inputs 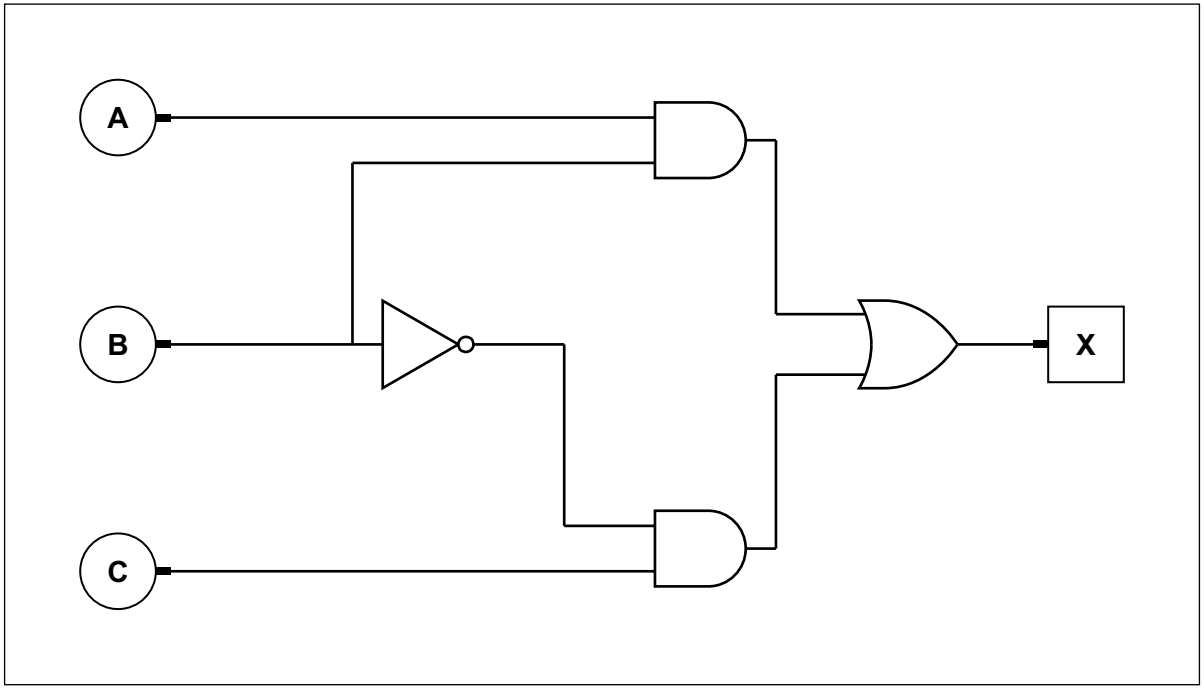 	**4**	

© Cambridge University Press & Assessment 2026

<table>
<tr><th>Question</th><th>Answer</th><th>Marks</th><th>Guidance</th></tr>
<tr><td>7(b)</td><td>
Four marks for 8 correct outputs
Three marks for pairs of correct outputs
Two marks for pairs correct outputs
One mark for pair of correct outputs

<table>
<tr><th>A</th><th>B</th><th>C</th><th>X</th></tr>
<tr><td>0</td><td>0</td><td>0</td><td>0</td></tr>
<tr><td>0</td><td>0</td><td>1</td><td>1</td></tr>
<tr><td>0</td><td>1</td><td>0</td><td>0</td></tr>
<tr><td>0</td><td>1</td><td>1</td><td>0</td></tr>
<tr><td>1</td><td>0</td><td>0</td><td>0</td></tr>
<tr><td>1</td><td>0</td><td>1</td><td>1</td></tr>
<tr><td>1</td><td>1</td><td>0</td><td>1</td></tr>
<tr><td>1</td><td>1</td><td>1</td><td>1</td></tr>
</table>
</td><td>4</td><td></td></tr>
</table>

© Cambridge University Press & Assessment 2026

Question	Answer	Marks	Guidance
8	**One** mark for the correct features in a row	**6**	

feature	**IP address**	
	IPv4	IPv6
It is a 128-bit address.		✓
It can be static or dynamic.	✓	✓
It uses a dot to separate numbers.	✓	
It can contain hexadecimal numbers.		✓
It can be used to identify a device on a network.	✓	✓
It contains four sets of numbers.	✓	

Question	Answer	Marks	Guidance
9	**One** mark for each correct cloud storage model	**4**	

statement	**cloud storage model**
The services and infrastructure are provided by a third party.	Public
The services and infrastructure are dedicated to a single organisation.	Private
It is the most cost-effective cloud storage model to initially implement.	Public
The services and infrastructure are normally dedicated to a single organisation but can be expanded to include those provided by a third party.	Hybrid

© Cambridge University Press & Assessment 2026

Question	Answer	Marks	Guidance
10(a)	Any **two** from: For example: • the robot is more accurate when planting seeds • the robot does not need to take breaks // works 24/7 • the robot will not get bored of performing a repetitive task • the farmer can perform other tasks whilst the robot is planting the seeds • the robot may be faster/more efficient (at planting seeds) • safer as the robot can work in a more dangerous environments (e.g. with animals in a field) • doesn't need to pay labour costs/**wages**	**2**	
10(b)	Any **two** from: For example: • the robot may have been expensive to **purchase** • the robot may need **maintenance** and this may be costly • farmer/workers may be de-skilled • farmer may need training in how to use the robot • if it breaks the farmer will need to manually plant • if faulty it may cause damage to farm/seeds • cannot adapt to a **new**/**unexpected** event	**2**	
10(c)(i)	input layer hidden layers output layer	**3**	

© Cambridge University Press & Assessment 2026

Question	Answer	Marks	Guidance
10(c)(ii)	Any **two** from: For example: • creating a map of the field • learning the best route • learning where obstacles are • learning the terrain • learning when to plant a seed / closeness / depth • learning how to adapt to different soil types	**2**	
10(c)(iii)	Any **four** from: For example: • it could create inequality amongst farmers as only some farmers can afford it • there could be issues with accountability for harm caused by the robot • if robots are trained on biased/inaccurate data this will cause unwanted results/performance • AI collecting and storing data subject to misuse by 3rd parties • potential to collect data without consent could cause privacy issues • AI in farming may require more resources which impacts on the environment	**4**	

Question	Answer	Marks	Guidance
11(a)	• classical computer stores data as bits • … whereas a quantum computer (QC) stores data as qubits • classical computer can only store data in two states • … whereas a QC can store data in more than two states • classical computer can only store data in one state at a time • … whereas a QC can store data in multiple states at a time • classical computer uses binary logic • … whereas a QC use quantum logic gate • classical computer uses electrons to store data • … whereas a QC uses qbits (made from either photons or electrons)	**4**	

© Cambridge University Press & Assessment 2026

Question	Answer	Marks	Guidance
11(b)	For example: • solve some complex problems a lot faster • very efficient at finding the optimal solution to a task • can process many possible inputs at the same time • energy efficient when solving certain complex problems • qubits can process/hold massive amounts of data	**2**	

© Cambridge University Press & Assessment 2026